NOTES: (UNLESS OTHERWISE SPECIFIED)

1. ALL ITEMS NOT EXPLICITLY DEFINED IN THIS DRAWING ARE DEFINED BY THE MASTER CAD MODELS. ALL DIMENSIONS NOT DEFINED ON THIS DRAWING ARE CONTAINED WITHIN THE FOLLOWING INTERMEDIATE FILES:
   - 1.1. FLAT PARTS: <MATERIAL>_<MATERIAL COLOR, IF APPLICABLE>_ <THICKNESS, IN DECIMAL INCHES>_<PN>_ <REV>.v<VERSION NUMBER OF MODEL>.DXF
   - 1.2. FDM 3D PRINTED PARTS: FDM_<PN>_<REV>.v<VERSION # OF MODEL>.STL
2. ALL 3D PRINTED PARTS WHICH INTERFACE WITH MDF STRUCTURE ARE PRINTED TO MAXIMUM MATERIAL CONDITION. REMOVAL OF .02 MATERIAL ON ALL SURFACES WHICH INTERFACE WITH MDF IS AUTHORIZED TO ALLOW FOR VARIATION IN FINISH AND MDF MANUFACTURING TOLERANCES, AS REQUIRED.

REVISION HISTORY			
REV	DESCRIPTION	DATE	APPROVED
-	INITIAL RELEASE	3/31/2023	

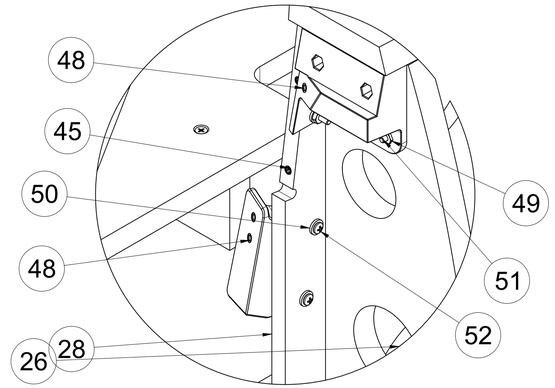

DETAIL A
SCALE 1:2

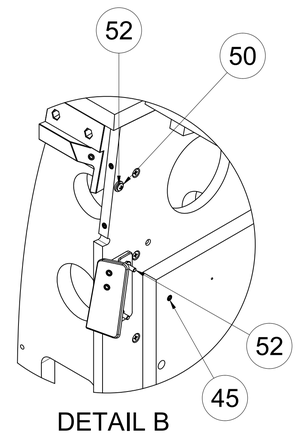

DETAIL B
SCALE 1:3

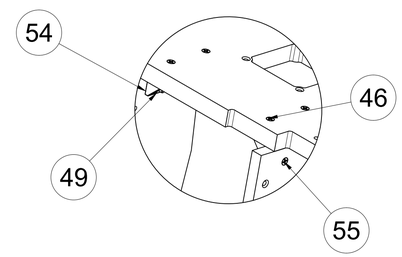

DETAIL E
SCALE 1:3

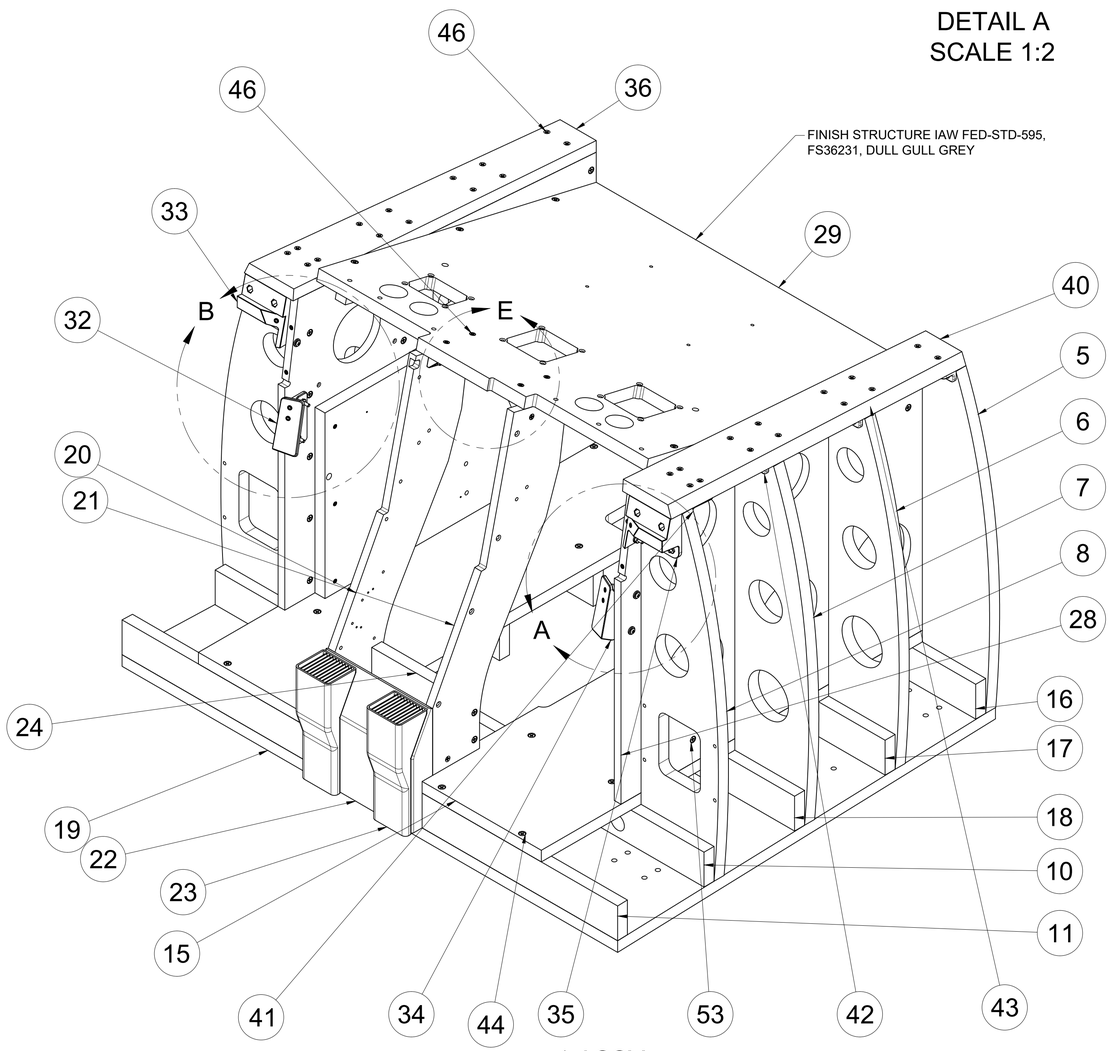

-1 ASSY

ITEM	QTY	PART NUMBER	DESCRIPTION	MATERIAL
55	4	90471A276	FHS, 100DEG, #8-32 X 1.00, STEEL	STL
54	2	OH2A1A-54	LIP CENTER PEDESTAL UPPER BRACKET	PETG
53	64	90252A112	FHWS, 82DEG, #8 X 1.00, STEEL, BLK, FOR MDF	STL
52	9	90272A201	PHS, #8-32 X 1.250, STEEL	STL
51	16	90272A203	PHS, #8-32 X 1.50, STEEL	STL
50	27	98023A113	WASHER, #8, STEEL, ZINC	STL
49	64	91841A009	NUT, #8-32, 18-8	SS
48	10	93365A140	INSERT, 8-32, BRASS, FOR PLASTICS	BRS
47	4	90471A435	FHS, 100DEG, #8-32 X .625, STEEL	STL
46	35	90471A436	FHS, 100DEG, #8-32 X 1.25, STEEL	STL
45	24	92105A660	INSERT, 8-32, SELF TAPPING, FOR SOFTWOOD	ZINC
44	77	90252A115	FHWS, 82DEG, #8 X 1.50, STEEL, BLK, FOR MDF	STL
43	2	OH2A1A1-52	LIP SILL BRACKET B-R	PETG
42	3	OH2A1A1-51	LIP SILL BRACKET A-R	PETG
41	1	OH2A1A1-50	AFT RIGHT LIP SILL BRACKET1	PETG
40	1	OH2A1A1-49	RIGHT LIP CANOPY SILL1	MDF
39	2	OH2A1A1-48	LIP SILL BRACKET B-L	PETG
38	3	OH2A1A1-47	LIP SILL BRACKET A-L	PETG
37	1	OH2A1A1-46	AFT LIP SILL BRACKET	PETG
36	1	OH2A1A1-45	LEFT LIP CANOPY SILL	MDF
35	1	OH2A1A1-44	UPPER RIGHT LIP AUX SUPPORT BRACKET1	PETG
34	1	OH2A1A1-43	LOWER RIGHT LIP AUX SUPPORT BRACKET	PETG
33	1	OH2A1A1-42	UPPER LEFT LIP AUX SUPPORT BRACKET	PETG
32	1	OH2A1A1-41	LOWER LEFT LIP AUX SUPPORT BRACKET	PETG
31	1	OH2A1A1-40	OUTBOARD UPPER RIGHT INSTRUMENT PANEL LONGERON	MDF
30	1	OH2A1A1-39	OUTBOARD UPPER INSTRUMENT PANEL LONGERON	MDF
29	1	OH2A1A1-38	UPPER INSTRUMENT PANEL MOUNT	MDF
28	1	OH2A1A1-37	RIGHT OUTBOARD BULKHEAD	MDF
27	1	OH2A1A1-36	LEFT OUTBOARD BULKHEAD	MDF
26	1	OH2A1A1-35	RIGHT OUTBOARD FOOTWELL WALL	MDF
25	1	OH2A1A1-34	LEFT OUTBOARD FOOTWELL WALL	MDF
24	1	OH2A1A1-33	CENTER PEDESTAL LOWER MOUNT	MDF
23	2	OH2A1A1-32	LOWER ECS VENT	PETG
22	1	OH2A1A1-31	CENTER PEDESTAL LOWER TRIM	PETG
21	1	OH2A1A1-30	RIGHT INBOARD FOOTWELL WALL	MDF
20	1	OH2A1A1-29	LEFT INBOARD FOOTWELL WALL	MDF
19	1	OH2A1A1-28	LOWER INSTRUMENT PANEL BASE	MDF
18	1	OH2A1A1-27	SUBFLOOR BRACE F	MDF
17	1	OH2A1A1-26	SUBFLOOR BRACE G	MDF
16	1	OH2A1A1-25	SUBFLOOR BRACE H	MDF
15	1	OH2A1A1-24	RIGHT FOOTWELL FLOOR	MDF
14	1	OH2A1A1-23	SUBFLOOR BRACE C	MDF
13	1	OH2A1A1-22	SUBFLOOR BRACE D	MDF
12	1	OH2A1A1-21	SUBFLOOR BRACE E	MDF
11	1	OH2A1A1-20	SUBFLOOR BRACE A	MDF
10	1	OH2A1A1-19	SUBFLOOR BRACE B	MDF
9	1	OH2A1A1-18	LEFT FOOTWELL FLOOR	MDF
8	1	OH2A1A1-17	RIB O	MDF
7	1	OH2A1A1-16	RIB P	MDF
6	1	OH2A1A1-15	RIB Q	MDF
5	1	OH2A1A1-14	RIB R	MDF
4	1	OH2A1A1-13	RIB K	MDF
3	1	OH2A1A1-12	RIB L	MDF
2	1	OH2A1A1-11	RIB M	MDF
1	1	OH2A1A1-10	RIB N	MDF

PARTS LIST

UNLESS OTHERWISE SPECIFIED:

DIMENSIONS ARE IN INCHES.

DUAL DIMENSIONS ARE IN MILIMETERS AND ENCLOSED IN SQUARE BRACKETS.

INTERPRET DRAWING IAW ASME Y14.100-2017.

INTERPRET DIM AND TOL IAW ASME Y14.5-2009.

REMOVE ALL BURRS AND SHARP EDGES TO .05 MAX.

DIMENSIONS APPLY BEFORE FINISH.

UOS INCH TOLERANCES ARE:

DECIMALS:
.X ± .1
.XX ± .03
.XXX ± .010

ANGLES:
MACHINED ± .5°
LOCATING ± .5°
FORMED ± 2°
CHAMFERS ± 5°

DRILLED HOLE DIAMETERS:
.0135 - .125: +.004/-.001
.126 - .250: +.005/-.001
.251 - .500: +.006/-.001
.501 - .750: +.008/-.001
.751 - 1.000: +.010/-.001
1.001 - 2.000: +.012/-.001

OPEN HORNET
https://www.OpenHornet.com

TITLE
ASSY, LOWER INSTRUMENT PANEL STRUCTURE
LOWER INSTRUMENT PANEL

DESIGNED	J. STEENSEN	03/31/2023
CHECKED		
DRAWN	J. STEENSEN	03/31/2023

CC BY NC SA

SIZE D | DWG NO OH2A1A1-1 | REV -

SCALE 1:4 | DO NOT SCALE DWG | SHEET 1/2

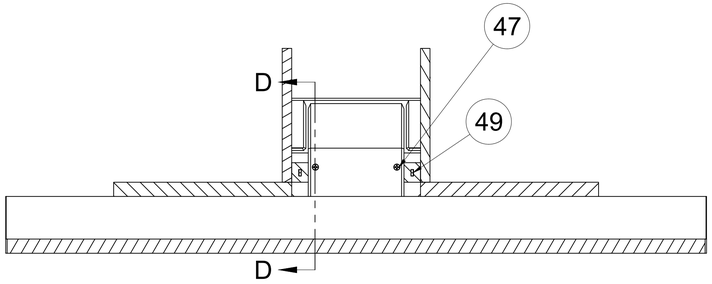

SECTION C-C
SCALE 1:4

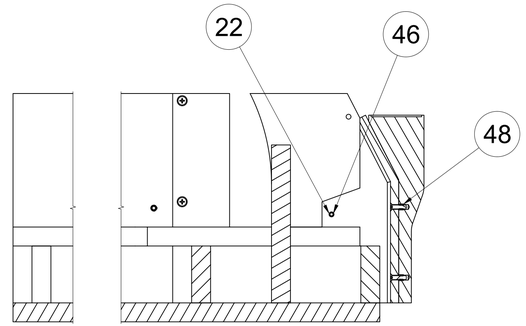

SECTION D-D
SCALE 1:3

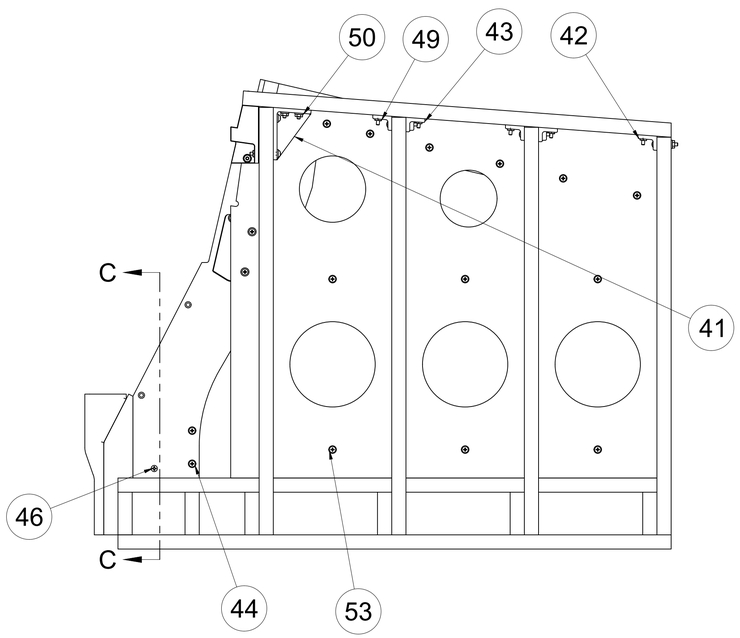

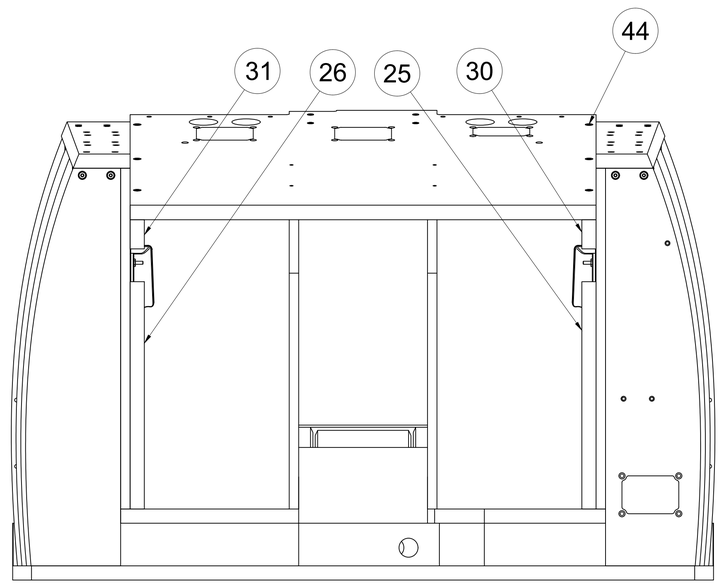

-1 ASSY

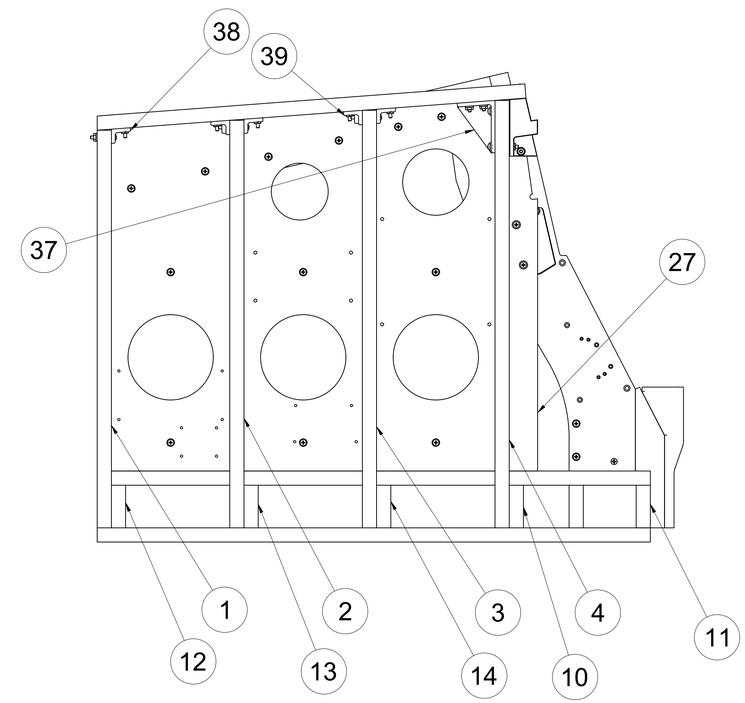

OPEN HORNET
https://www.OpenHornet.com

CC BY NC SA

SIZE	DWG NO	REV
D	OH2A1A1-1	-
SCALE 1:4		SHEET 2/2